OUTSWING SOLID PIVOT DOOR

(HVHZ) (IMPACT)

GENERAL NOTES:

1. THE PRODUCT SHOWN HEREIN IS DESIGNED AND MANUFACTURED TO COMPLY WITH THE CURRENT FLORIDA BUILDING CODE (FBC), INCLUDING HVHZ AND HAS BEEN EVALUATED ACCORDING TO THE FOLLOWING:
   - TAS 201-94
   - TAS 202-94
   - TAS 203-94

2. ADEQUACY OF THE EXISTING STRUCTURAL CONCRETE/MASONRY, STEEL, AND 2X FRAMING AS A MAIN WIND FORCE RESISTING SYSTEM CAPABLE OF WITHSTANDING AND TRANSFERRING APPLIED PRODUCT LOADS TO THE FOUNDATION IS THE RESPONSIBILITY OF THE ENGINEER OR ARCHITECT OF RECORD FOR THE PROJECT OF INSTALLATION.

3. 1X AND 2X BUCKS (WHEN USED) SHALL BE DESIGNED AND ANCHORED TO PROPERLY TRANSFER ALL LOADS TO THE STRUCTURE. BUCK DESIGN AND INSTALLATION IS THE RESPONSIBILITY OF THE ENGINEER OR ARCHITECT OF RECORD FOR THE PROJECT OF INSTALLATION.

4. THE INSTALLATION DETAILS DESCRIBED HEREIN ARE GENERIC AND MAY NOT REFLECT ACTUAL CONDITIONS FOR A SPECIFIC SITE. IF SITE CONDITIONS CAUSE INSTALLATION TO DEVIATE FROM THE REQUIREMENTS DETAILED HEREIN, A LICENSED ENGINEER OR ARCHITECT SHALL PREPARE SITE SPECIFIC DOCUMENTS FOR USE WITH THIS DOCUMENT IN NON-HVHZ AREAS. IN HVHZ AREAS, ONE TIME PRODUCT APPROVAL TO BE OBTAINED FROM MIAMI-DADE RER.

5. APPROVED IMPACT PROTECTIVE SYSTEM **IS NOT REQUIRED** ON THIS PRODUCT IN AREAS REQUIRING IMPACT RESISTANCE.

6. DOOR FRAME MATERIAL: STAINLESS STEEL

7. DISSIMILAR METALS INCLUDING FASTENERS SHALL BE PROTECTED IN ACCORDANCE WITH THE FBC.

DESIGN PRESSURE RATING		
FRAME SIZE	DESIGN PRESSURE	MISSILE IMPACT RATING
95 5/8" x 154 15/16"	+70/-70 PSF	LARGE MISSILE IMPACT

NOTE: NOT TESTED FOR WATER INFILTRATION REQUIREMENTS. SHALL BE INSTALLED AT LOCATIONS WHERE DOOR IS PROTECTED BY OVERHANG SUCH THAT OVERHANG (OH) RATIO = OH LENGTH / OH HEIGHT IS $\geq$ 1.0

TABLE OF CONTENTS

SHEET	REVISION	SHEET DESCRIPTION
1	-	ELEVATION & GENERAL NOTES
2	-	ELEVATION & ANCHOR LAYOUT
3	-	VERTICAL & HORIZONTAL SECTIONS
4	-	INSTALLATION DETAILS & NOTES

FBS FORTIFIED & BALLISTIC SECURITY

FBS Fortified and Ballistic Security
3350 NW Boca Raton Boulevard
Boca Raton, Florida 33431
PH: (561) 409 6300

TITLE: *OUTSWING SOLID PIVOT DOOR (HVHZ)(IMPACT)*

ELEVATION & GENERAL NOTES

PREPARED BY:
BUILDING DROPS, INC.
398 E. DANIA BEACH BLVD., STE. 338
DANIA BEACH, FL 33004
PH: (954)399-8478
FAX: (954)744.4738
WEB: www.buildingdrops.com
BUILDING DROPS

REMARKS	BY	DATE

THE INSTALLATION DETAILS DESCRIBED HEREIN ARE GENERIC AND MAY NOT REFLECT ACTUAL CONDITIONS FOR A SPECIFIC SITE. IF SITE CONDITIONS CAUSE INSTALLATION TO DEVIATE FROM THE REQUIREMENTS DETAILED HEREIN, A LICENSED ENGINEER OR ARCHITECT SHALL PREPARE SITE SPECIFIC DOCUMENTS FOR USE WITH THIS DOCUMENT

Digitally signed by Hermes F. Norero, P.E.
Reason: I am approving this document
Date: 2022.06.10 14:33:55 -04'00'

HERMES F. NORERO
LICENSE
No. 73778
STATE OF FLORIDA
PROFESSIONAL ENGINEER

HERMES F. NORERO, P.E.
FLORIDA P.E. No 73778
BUILDING DROPS, INC
398 E. DANIA BEACH BLVD. # 338
DANIA BEACH, FL 33004
FBPE CERT. OF AUTHORIZATION No. 29578

FL37351

DATE: 06.02.22

DWG. BY: ER | CHK. BY: HFN

SCALE: NTS

DWG. #: FBS003

SHEET: 1 OF 4

6/2/2022 10:56 AM
s:\projects\fbs doors\fbc-22-0151.1 - fbc submittal - fl37351 inswing addition\dwgs\outswing\fbs003-all steel pivot door 12-10-20.dwg

6/2/2022 10:56 AM

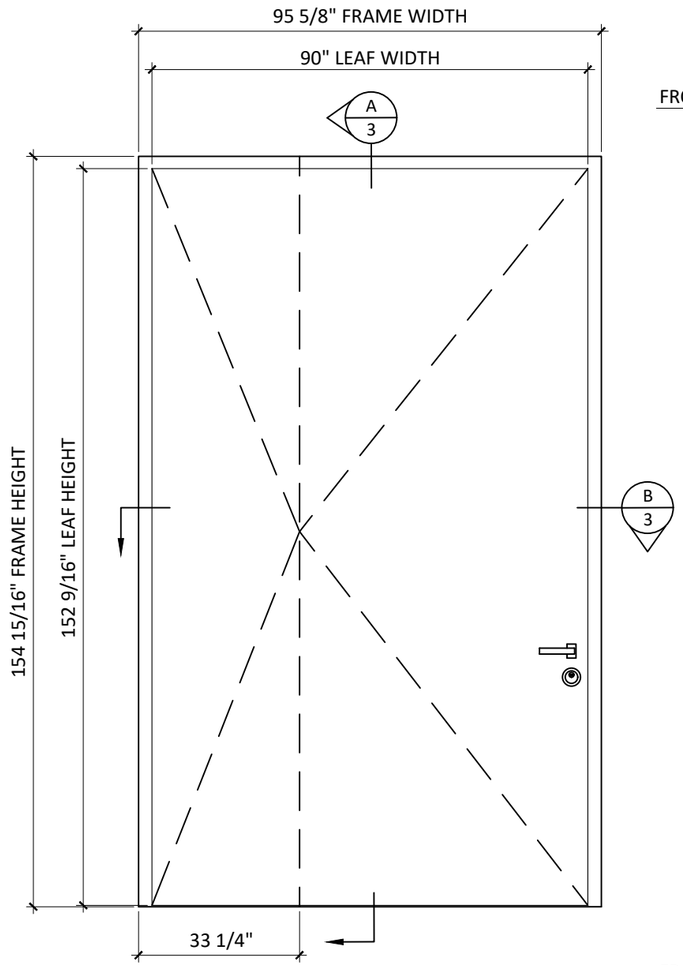

ELEVATION

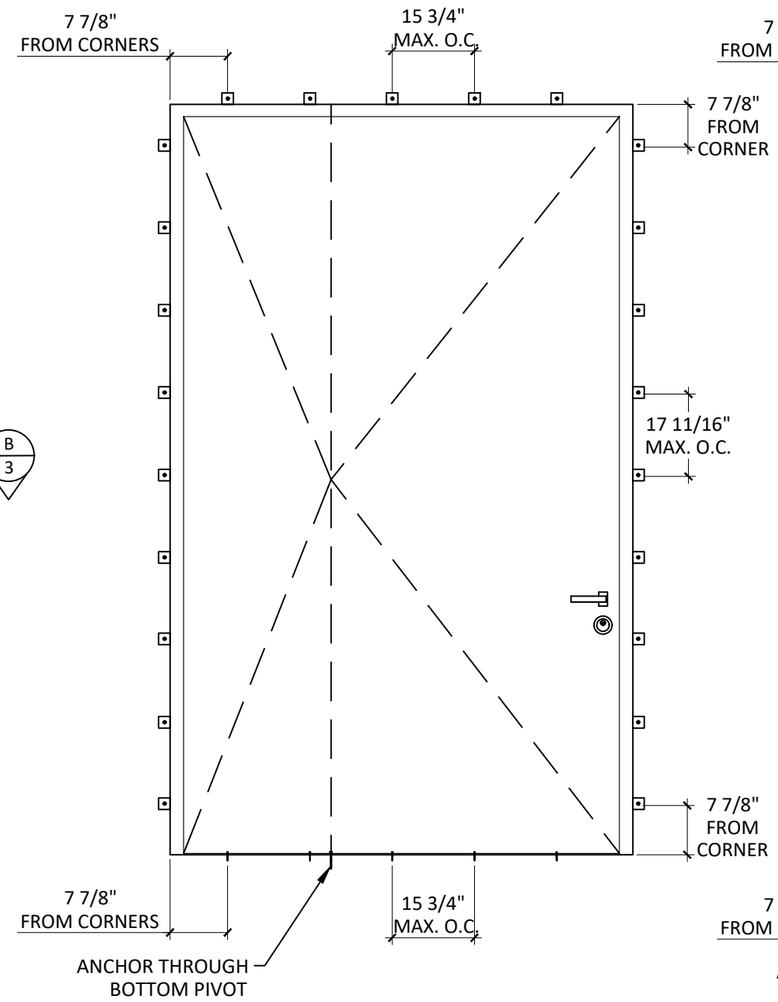

ANCHOR LAYOUT MOUNTING BRACKET

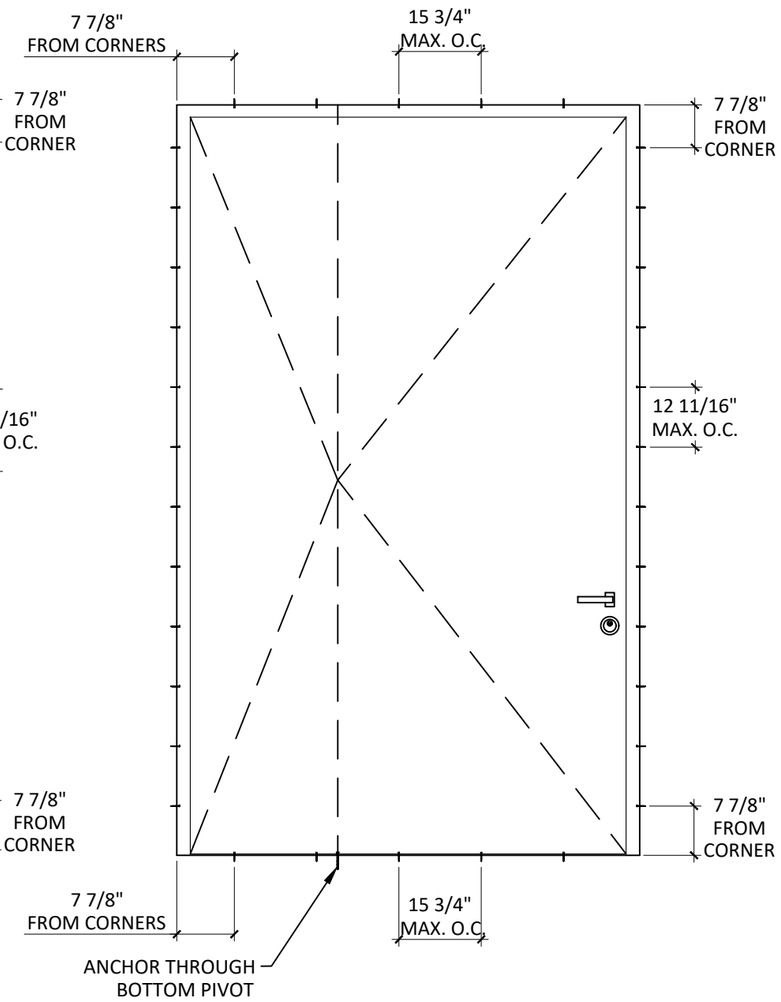

ANCHOR LAYOUT THROUGH FRAME

FORTIFIED & BALLISTIC SECURITY

FBS Fortified and Ballistic Security
3350 NW Boca Raton Boulevard
Boca Raton, Florida 33431
PH: (561) 409 6300

TITLE: *OUTSWING SOLID PIVOT DOOR (HVHZ)(IMPACT)*
ELEVATION & ANCHOR LAYOUTS

PREPARED BY:
BUILDING DROPS, INC.
398 E. DANIA BEACH BLVD., STE. 338
DANIA BEACH, FL 33004
PH: (954)399-8478
FAX: (954)744.4738
WEB: www.buildingdrops.com

REMARKS	BY	DATE

THE INSTALLATION DETAILS DESCRIBED HEREIN ARE GENERIC AND MAY NOT REFLECT ACTUAL CONDITIONS FOR A SPECIFIC SITE. IF SITE CONDITIONS CAUSE INSTALLATION TO DEVIATE FROM THE REQUIREMENTS DETAILED HEREIN, A LICENSED ENGINEER OR ARCHITECT SHALL PREPARE SITE SPECIFIC DOCUMENTS FOR USE WITH THIS DOCUMENT

HERMES F. NORERO
LICENSE
No. 73778
STATE OF
FLORIDA
PROFESSIONAL ENGINEER

HERMES F. NORERO, P.E.
FLORIDA P.E. No 73778
BUILDING DROPS, INC
398 E. DANIA BEACH BLVD. # 338
DANIA BEACH, FL 33004
FBPE CERT. OF AUTHORIZATION No. 29578

FL37351

DATE: 06.02.22

DWG. BY: ER

CHK. BY: HFN

SCALE: NTS

DWG. #: FBS003

SHEET: 2 OF 4

s:\projects\fbs doors\fbc-22-0151.1 - fbc submittal - fl37351 inswing addition\dwgs\outswing\fbs003-all steel pivot door 12-10-20.dwg

6/2/2022 10:56 AM

s:\projects\fbs doors\fbc-22-0151.1 - fbc submittal - fl37351 inswing addition\dwgs\outswing\fbs003-all steel pivot door 12-10-20.dwg

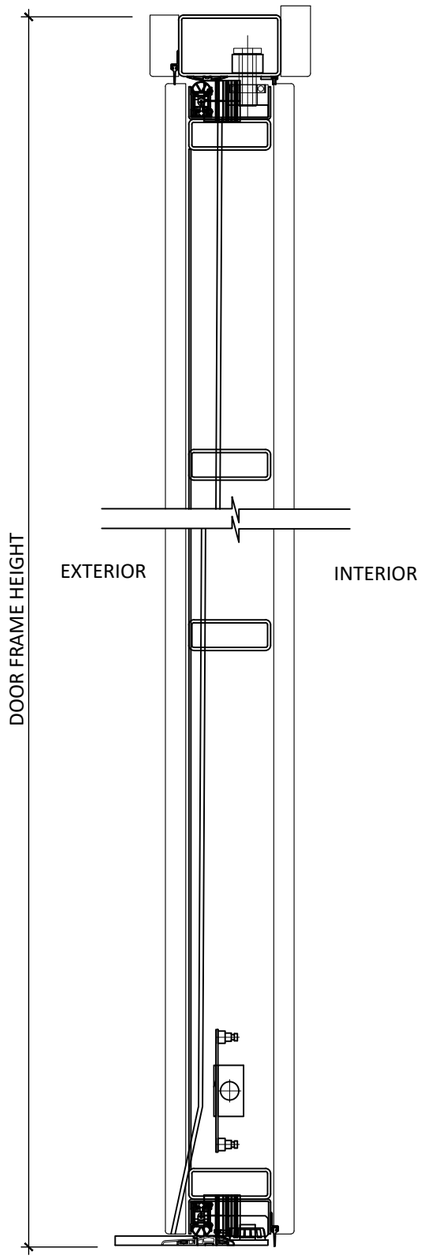

A/3 **VERTICAL SECTION**

HEAD - THRESHOLD DETAIL PIVOT DOOR

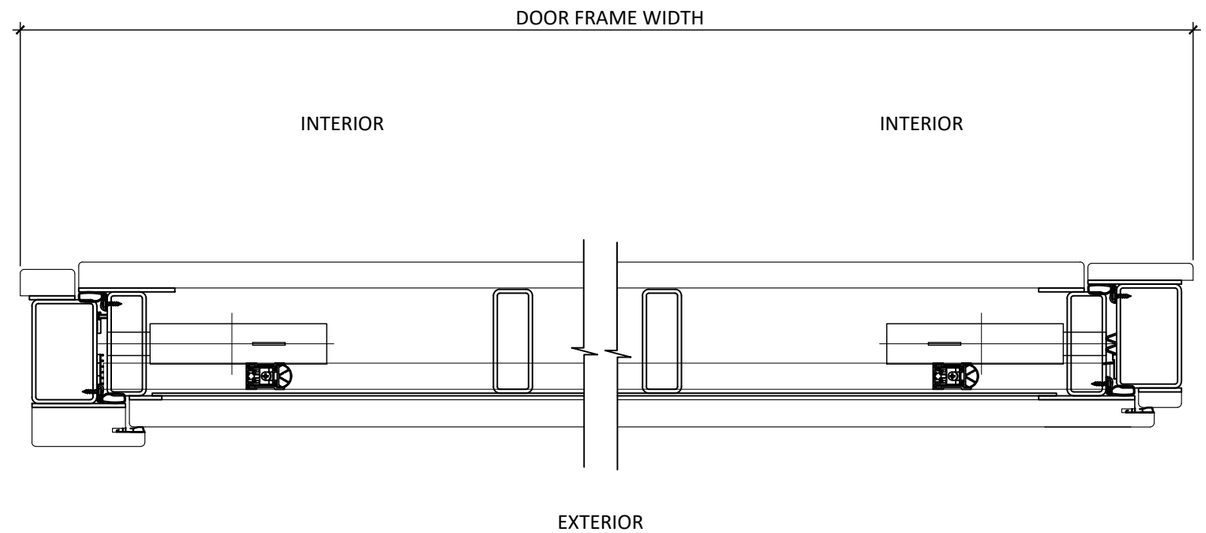

B/3 **HORIZONTAL SECTION**

JAMB DETAIL PIVOT DOOR

FBS
FORTIFIED & BALLISTIC SECURITY
FBS Fortified and Ballistic Security
3350 NW Boca Raton Boulevard
Boca Raton, Florida 33431
PH: (561) 409 6300

TITLE: *OUTSWING SOLID PIVOT DOOR (HVHZ)(IMPACT)*

VERTICAL & HORIZONTAL SECTIONS

PREPARED BY:
BUILDING DROPS, INC.
398 E. DANIA BEACH BLVD., STE. 338
DANIA BEACH, FL 33004
PH: (954)399-8478
FAX: (954)744.4738
WEB: www.buildingdrops.com
BUILDING DROPS

REMARKS	BY	DATE

THE INSTALLATION DETAILS DESCRIBED HEREIN ARE GENERIC AND MAY NOT REFLECT ACTUAL CONDITIONS FOR A SPECIFIC SITE. IF SITE CONDITIONS CAUSE INSTALLATION TO DEVIATE FROM THE REQUIREMENTS DETAILED HEREIN, A LICENSED ENGINEER OR ARCHITECT SHALL PREPARE SITE SPECIFIC DOCUMENTS FOR USE WITH THIS DOCUMENT

HERMES F. NORERO
LICENSE
No. 73778
STATE OF
FLORIDA
PROFESSIONAL ENGINEER

HERMES F. NORERO, P.E.
FLORIDA P.E. No 73778
BUILDING DROPS, INC
398 E. DANIA BEACH BLVD. # 338
DANIA BEACH, FL 33004
FBPE CERT. OF AUTHORIZATION No. 29578

FL37351

DATE: 06.02.22

DWG. BY: ER

CHK. BY: HFN

SCALE: NTS

DWG. #: FBS003

SHEET: 3 OF 4

INSTALLATION NOTES:

1. ONE (1) INSTALLATION ANCHOR IS REQUIRED AT EACH ANCHOR LOCATION SHOWN UNLESS OTHERWISE NOTED.

2. THE NUMBER OF INSTALLATION ANCHORS DEPICTED IS THE MINIMUM NUMBER OF ANCHORS TO BE USED FOR PRODUCT INSTALLATION.

3. INSTALL INDIVIDUAL INSTALLATION ANCHORS WITHIN A TOLERANCE OF ±1/2 INCH OF THE DEPICTED LOCATION IN THE ANCHOR LAYOUT DETAIL (I.E., WITHOUT CONSIDERATION OF TOLERANCES). TOLERANCES ARE NOT CUMULATIVE FROM ONE INSTALLATION ANCHOR TO THE NEXT.

4. SHIM AS REQUIRED AT EACH INSTALLATION ANCHOR WITH LOAD BEARING SHIM(S). MAX. ALLOWABLE SHIM STACK TO BE 1/4 INCH. SHIM WHERE SPACE OF 1/16 INCH OR GREATER OCCURS. SHIM(S) SHALL BE CONSTRUCTED OF HIGH DENSITY PLASTIC OR BETTER.

5. MINIMUM EMBEDMENT AND EDGE DISTANCE EXCLUDE WALL FINISHES, INCLUDING BUT NOT LIMITED TO STUCCO, FOAM, BRICK VENEER, AND SIDING.

6. INSTALLATION ANCHORS AND ASSOCIATED HARDWARE MUST BE MADE OF CORROSION RESISTANT MATERIAL OR HAVE A CORROSION RESISTANT COATING.

7. FOR HOLLOW BLOCK AND GROUT FILLED BLOCK, DO NOT INSTALL INSTALLATION ANCHORS INTO MORTAR JOINTS. EDGE DISTANCE IS MEASURED FROM FREE EDGE OF BLOCK OR EDGE OF MORTAR JOINT INTO FACE SHELL OF BLOCK.

8. INSTALLATION ANCHORS SHALL BE INSTALLED IN ACCORDANCE WITH ANCHOR MANUFACTURER'S INSTALLATION INSTRUCTIONS, AND ANCHORS SHALL NOT BE USED IN SUBSTRATES WITH STRENGTHS LESS THAN THE MINIMUM STRENGTH SPECIFIED BY THE ANCHOR MANUFACTURER.

ANCHOR SCHEDULE

METHOD	SUBSTRATE	ANCHOR SCHEDULE	MIN EMBEDMENT	MIN. EDGE DISTANCE
THROUGH MOUNTING BRACKET	WOOD: MIN. SG = 0.55	5/16" WOOD LAG SCREW	1.5"	0.75"
	METAL: 16 GAUGE Steel, MIN. Fy = 33KSI	5/16" GR. 5 SELF-DRILLING SCREW	3 THREADS MIN PENETRATION BEYOND METAL	0.75"
THROUGH FRAME	WOOD: MIN. SG = 0.55	5/16" WOOD LAG SCREW	1.5"	0.75"
	CONCRETE: MIN. F'C = 3000 PSI	5/16" HWH ELCO ULTRACON	1.75"	2.5"
	GROUT FILLED MASONRY: CMU per ASTM C90 MIN. 2000 PSI	5/16" HWH ELCO ULTRACON	1.75"	2.5"
	METAL: 16 GAUGE Steel, MIN. Fy = 33KSI	5/16" HWH GR. 5 SELF-DRILLING SCREW	3 THREADS MIN PENETRATION BEYOND METAL	0.75"
THROUGH THRESHOLD	CONCRETE: MIN. F'C = 3000 PSI	3/16" FH ELCO ULTRACON	1.75"	2.5"
THROUGH BOTTOM PIVOT	CONCRETE: MIN. F'C = 3000 PSI	5/16" FH ELCO ULTRACON	2"	3.125"

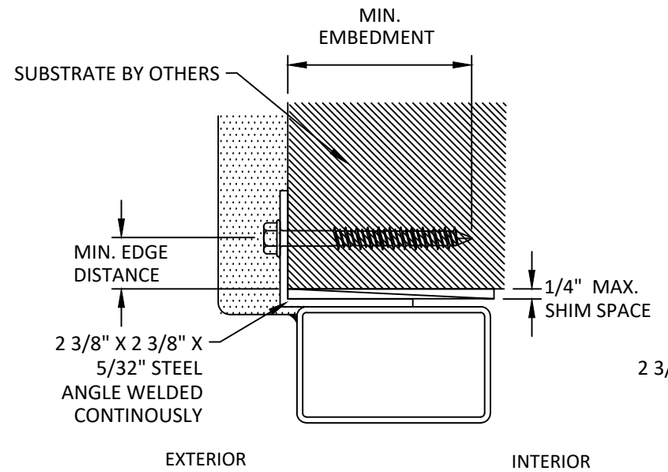

A/4 **VERTICAL SECTION**

HEAD - MOUNTING BRACKET INSTALLATION

NOTE: HEAD DETAIL SHOWN, JAMBS ARE SIMILAR

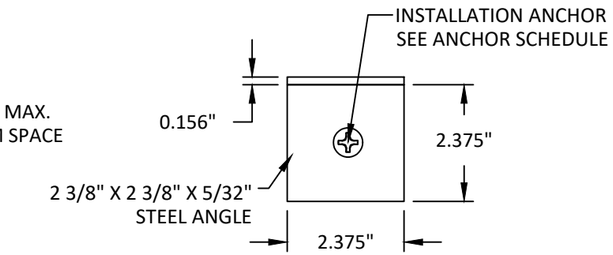

MOUNTING BRACKET DETAIL

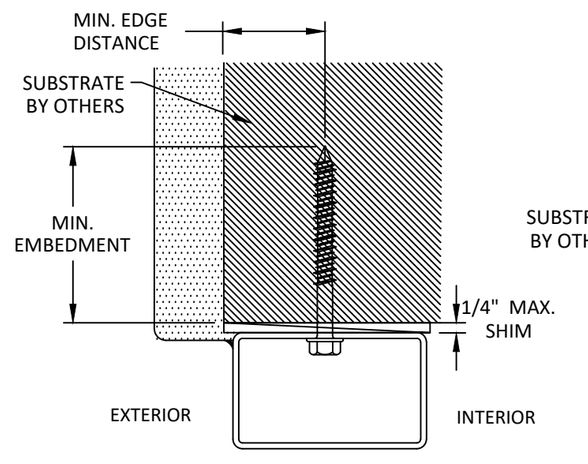

B/4 **VERTICAL SECTION**

THOUGH FRAME INSTALLATION

NOTE: HEAD DETAIL SHOWN, JAMBS ARE SIMILAR

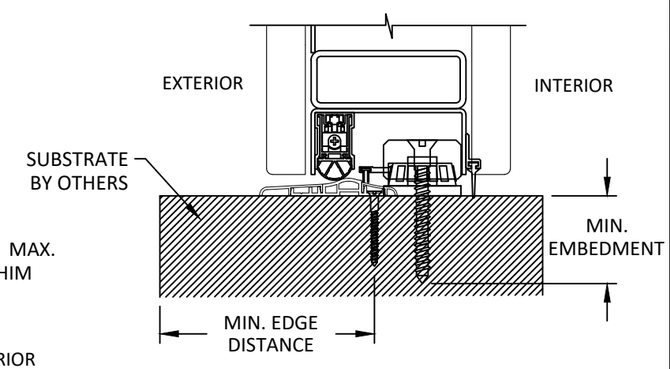

C/4 **VERTICAL SECTION**

THRESHOLD INSTALLATION

FBS FORTIFIED & BALLISTIC SECURITY
FBS Fortified and Ballistic Security
3350 NW Boca Raton Boulevard
Boca Raton, Florida 33431
PH: (561) 409 6300

TITLE: *OUTSWING SOLID PIVOT DOOR (HVHZ)(IMPACT) INSTALLATION DETAILS & NOTES*

PREPARED BY: BUILDING DROPS, INC.
398 E. DANIA BEACH BLVD., STE. 338
DANIA BEACH, FL 33004
PH: (954)399-8478
FAX: (954)744.4738
WEB: www.buildingdrops.com

REMARKS	BY	DATE

THE INSTALLATION DETAILS DESCRIBED HEREIN ARE GENERIC AND MAY NOT REFLECT ACTUAL CONDITIONS FOR A SPECIFIC SITE. IF SITE CONDITIONS CAUSE INSTALLATION TO DEVIATE FROM THE REQUIREMENTS DETAILED HEREIN, A LICENSED ENGINEER OR ARCHITECT SHALL PREPARE SITE SPECIFIC DOCUMENTS FOR USE WITH THIS DOCUMENT

HERMES F. NORERO LICENSE No. 73778 STATE OF FLORIDA PROFESSIONAL ENGINEER

HERMES F. NORERO, P.E.
FLORIDA P.E. No 73778
BUILDING DROPS, INC
398 E. DANIA BEACH BLVD. # 338
DANIA BEACH, FL 33004
FBPE CERT. OF AUTHORIZATION No. 29578

FL37351

DATE: 06.02.22

DWG. BY: ER | CHK. BY: HFN

SCALE: NTS

DWG. #: FBS003

SHEET: 4 OF 4

6/2/2022 10:56 AM
s:\projects\fbs doors\fbc-22-0151.1 - fbc submittal - fl37351 inswing addition\dwgs\outswing\fbs003-all steel pivot door 12-10-20.dwg